ADEKA ULTRA SEAL MC-2010MN

- visit www.wpw.com.au

Call +61 07 55921329 for more information

General Installation Procedures

Waterstop wall/slab joint

Place a small bead of Adeka Ultra Seal P-201 on any rough or scarred area prior to attaching MC-2010MN.

Attach MC-2010MN to the concrete by one of the following methods:

1. Attach with nails or concrete screws placed every 10" ~ 12" (approximately). If the concrete is rough, apply P-201 prior to attaching MC-2010MN.

Smooth, clean and dry concrete:

2. Adeka Ultra Seal P-201
3. 3M-2141 Rubber Adhesive.
4. Bostik 1142M Rubber Adhesive.
5. Hilti CA 3200 Adhesive.

Site conditions may warrant the use of a combination of attachment methods. Use P-201 on all corner joints and parallel splices.

Keep MC-2010MN taut and flat against the concrete during the attaching process. Do not allow any gap between the concrete and the MC-2010MN.

* NOTE: MC-2010MN must be placed between two rows of rebar. The required concrete coverage varies from 3.25" ~ 4.0" depending on concrete strength. For example, if concrete psi is 4260 or greater the required concrete coverage is >3.2". If the concrete psi is 2550 or less, the required coverage is >4".

For complete coverage information see MC Coverage Chart or call +61 07 55921329

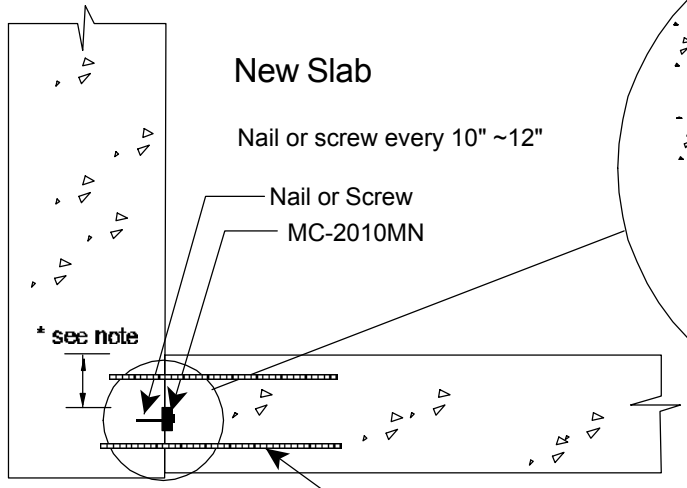

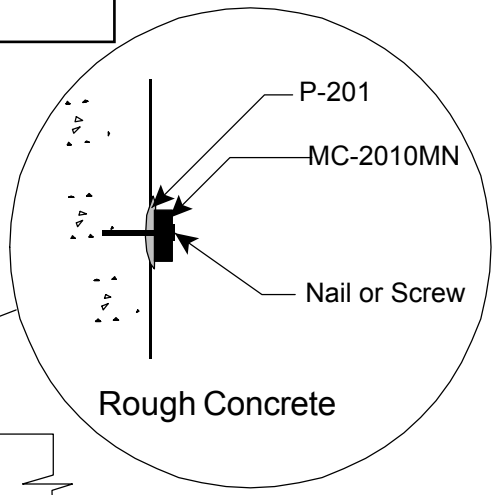

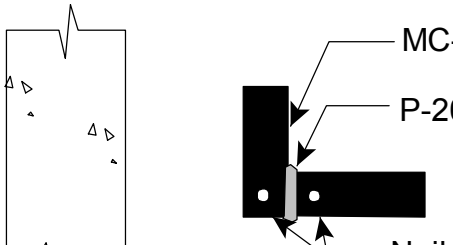

Corner Joint

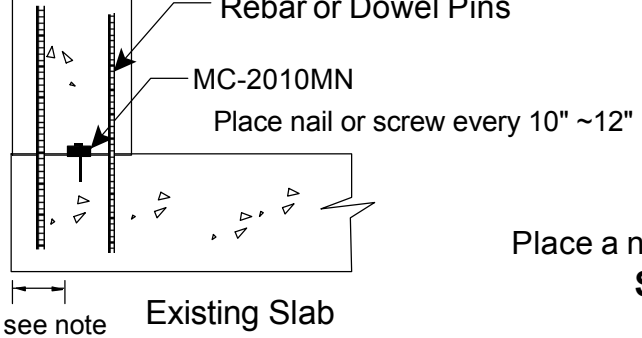

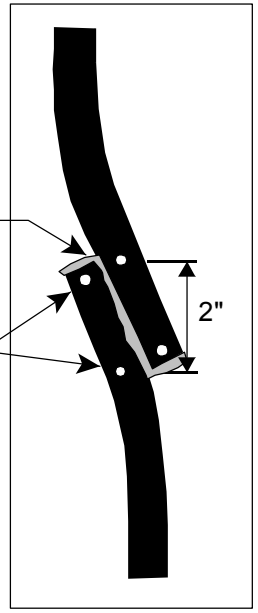

Place a nail or screw at the end of each strip

Side by Side Lap Procedure

Not to Scale.